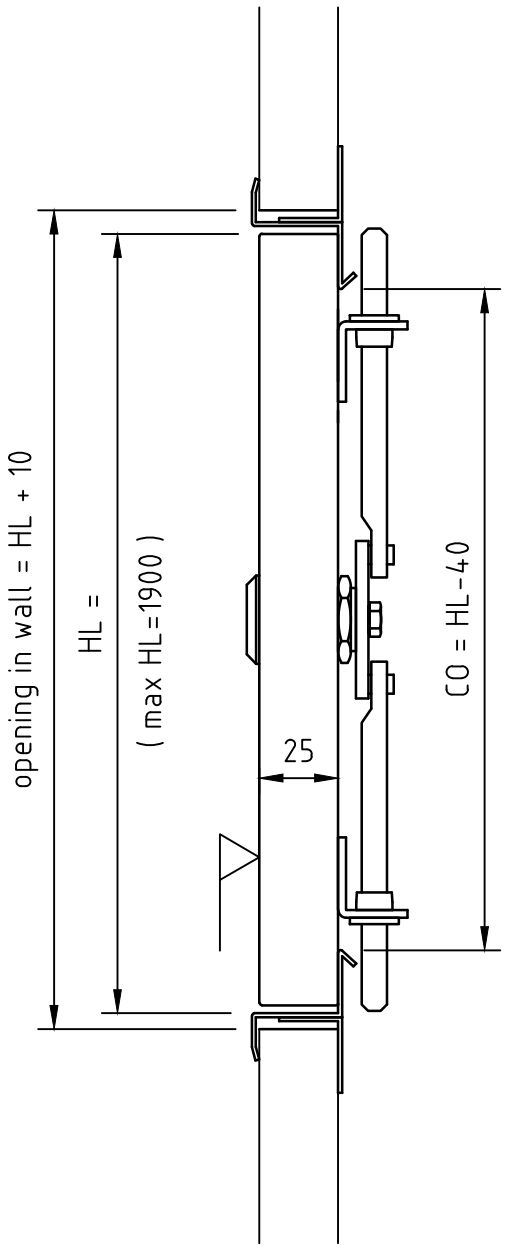

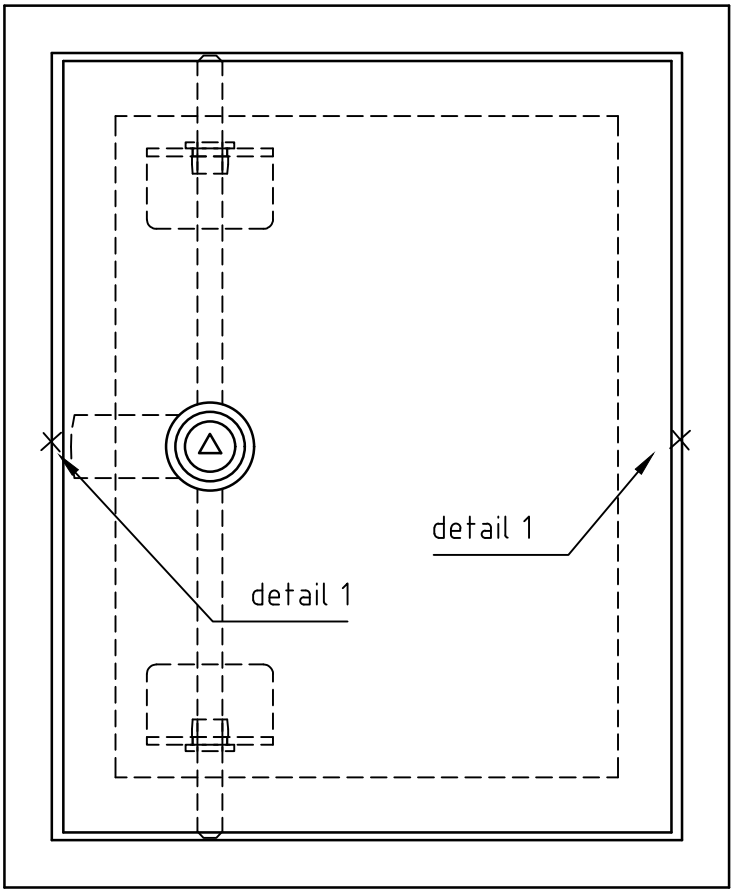

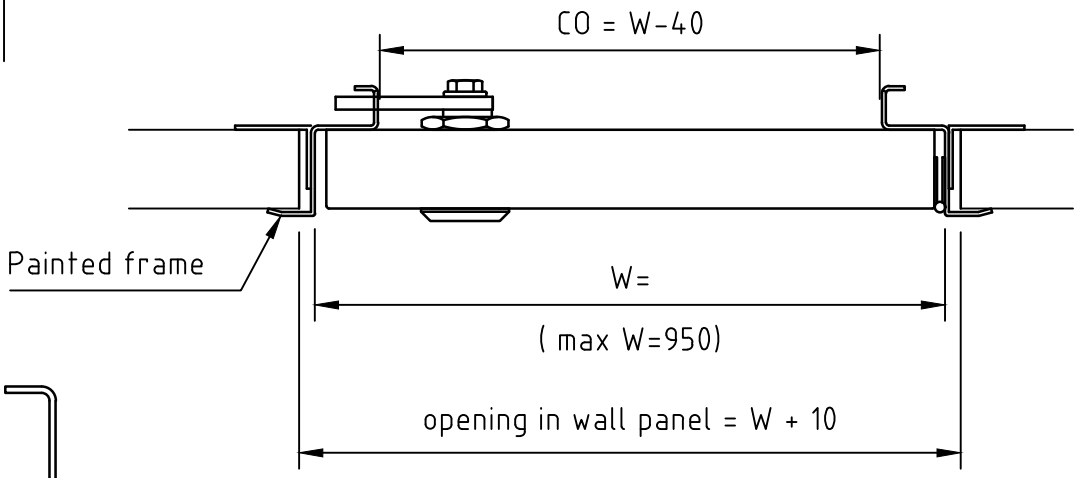

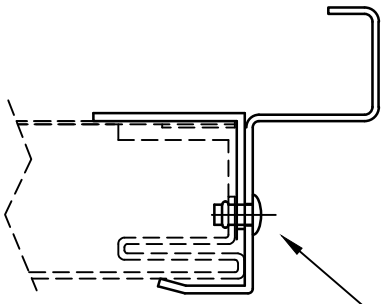

Detail 1

Subframe to be fastened
using 3,2 mm steel pop rivet
on both side left/right side

PVC or painted
thickness 0,6 mm

JMC 1 inspection hatch B-15	SBA **INTERIOR**	**Page 1 / 1**